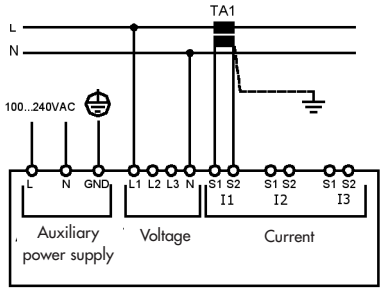

SINGLE PHASE

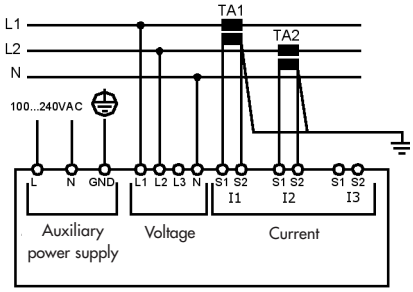

TWO PHASE

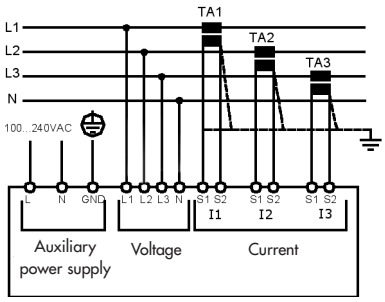

THREE PHASE with neutral

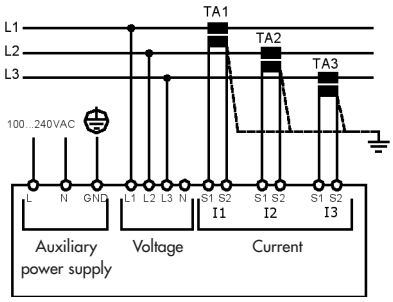

THREE PHASE without neutral

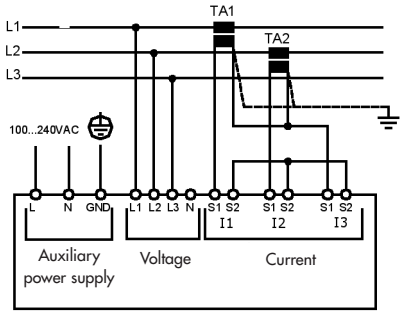

THREE PHASE ARON System

WIRING DIAGRAM
ALPTEC 200 IN NETWORK
From 1 up to 31
(without repeater)

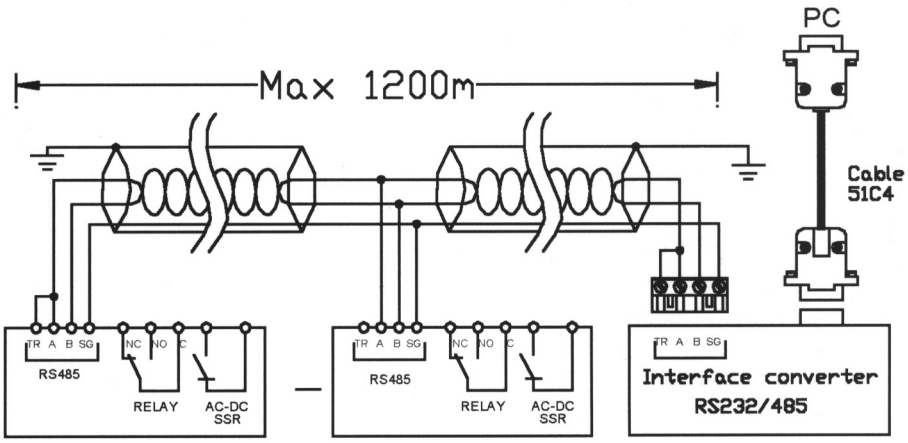

ALPTEC 200 n°31 ALPTEC 200 n°1 PX1